REV	DESCRIPTION	DRAWN	DATE
		APPROVED	DATE

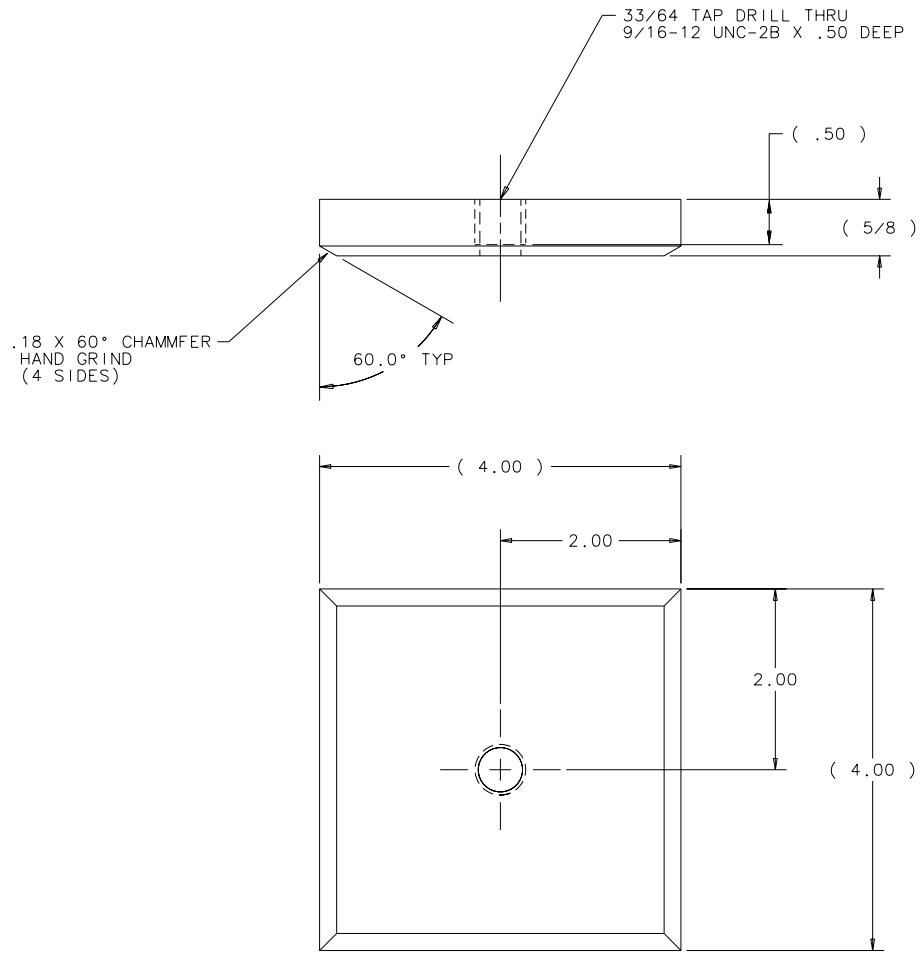

ITEM	PART NO.	DESCRIPTION OR SIZE	QTY.

PARTS LIST

UNLESS OTHERWISE SPECIFIED					
.XX	.XXX	ANGLES	ORIGINATOR	I.FANG	23-APR-2002
± .03	± ---	± 1°	DRAWN	G.SMITH	23-APR-2002
			CHECKED	J.KILMER	06-JUN-2002
			APPROVED	J.KILMER	06-JUN-2002

1. BREAK ALL SHARP EDGES .015 MAX.
2. DO NOT SCALE DRAWING.
3. DIMENSIONS BASED UPON ANSI Y14.5M-1982
4. ALL DIMENSIONS ARE INCHES
5. MAX. ALL MACH. SURFACES 125

USED ON: MD-397778

MATERIAL: 6061-T6 ALUMINUM 4 X 4 X 5/8

FERMI NATIONAL ACCELERATOR LABORATORY
UNITED STATES DEPARTMENT OF ENERGY

PPD/MECHANICAL DEPARTMENT
E907 CHAMBER #2 SUPPORT STAND
ADJ FT CONNECTING PT-INNERFRAME

SCALE	DRAWING NUMBER	SHEET	REV
1:1	3907.550-MC-397784	1 OF 1	

CREATED WITH : Ideas8m4 | GROUP: PPD/MECHANICAL DEPARTMENT