REV	DESCRIPTION	DRAWN	DATE
		APPROVED	DATE

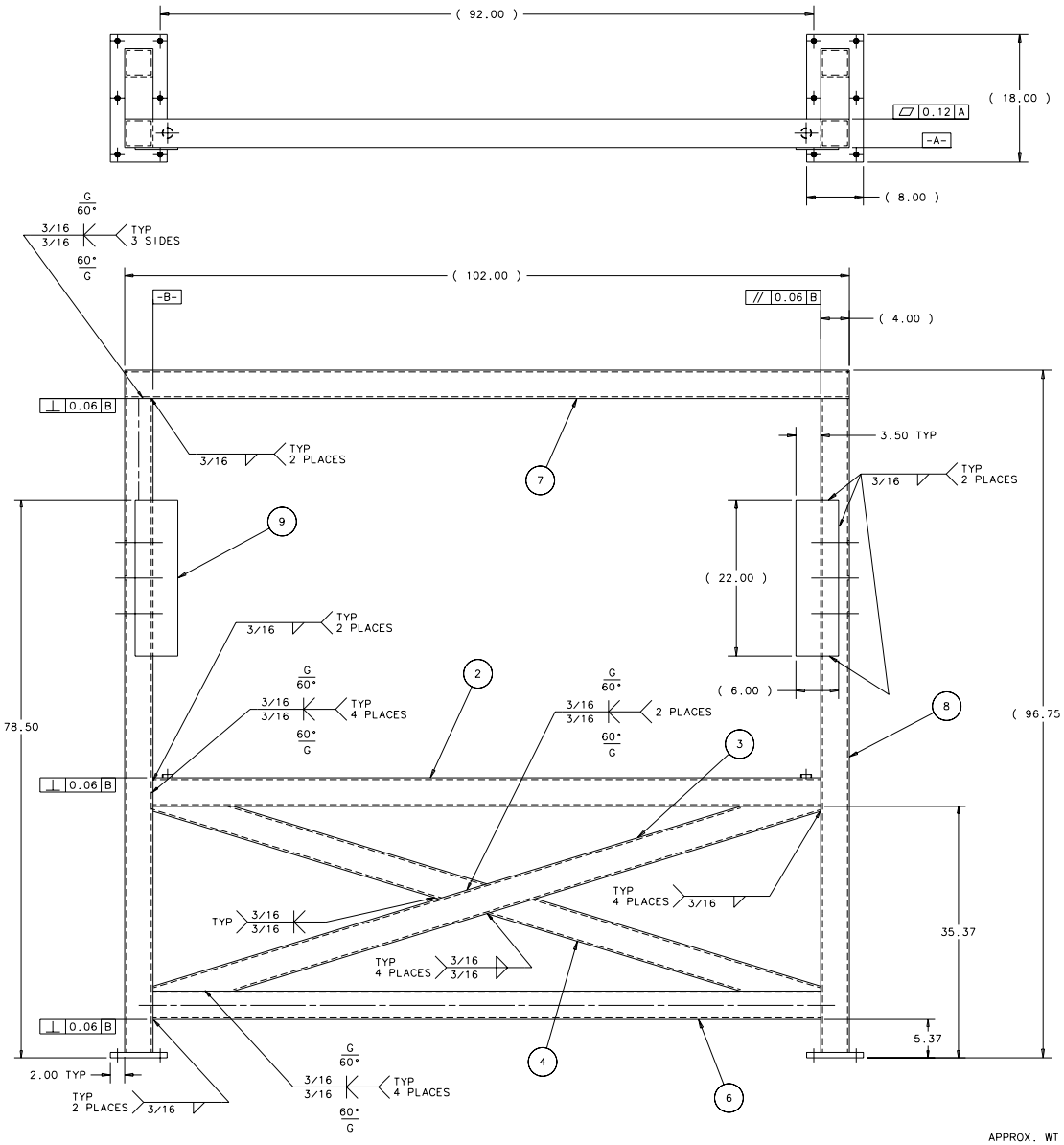

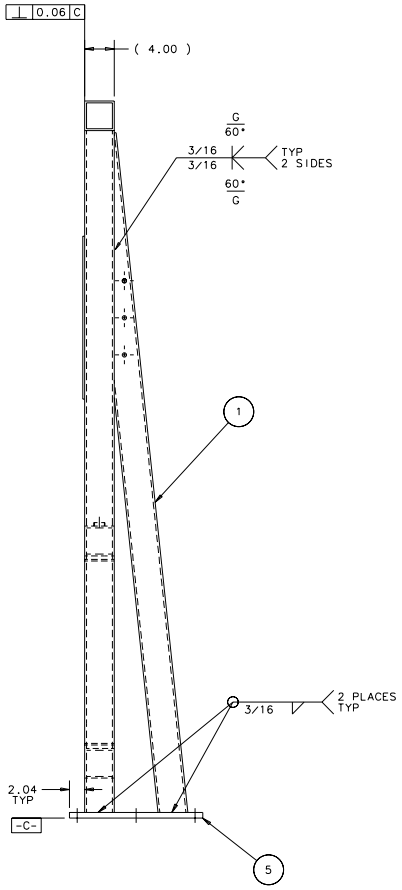

NOTES

1. WELDING SHELL BE DONE USING THE ELECTRIC ARC PROCESS BY WELDERS HOLDING CURRENT WELDING CERTIFICATES FOR EACH REQUIRED PROCEDURE.
2. ALL WELDING SHALL BE DONE WITH ER 5356 ELECTRODES UNLESS SPECIFIED OTHERWISE.
3. IT SHALL BE THE RESPONSIBILITY OF THE SUBCONTRACTOR TO VERIFY ALL PART DIMENSIONS TO INSURE THE FINAL ASSEMBLY AS SHOWN ON THE DRAWING 3907.500-MD-397786.

APPROX. WT = 340 LBS.

ITEM	PART NO.	DESCRIPTION OR SIZE	QTY.
9	COML	GUIDE PLATE-ALUM. 6061-T6 22.00 X 6.00 X 1/4"	2
8	MC-421007	OUTER FRAME VERT. TUBE	2
7	MC-421006	OUTER FRAME UPPER TUBE	1
6	MC-421005	OUTER FRAME LOWER TUBE	1
5	MC-397792	OUTER FRAME BASE PLATE	2
4	MC-397791	OUTER FRAME SHORT CROSS TUBE	2
3	MC-397790	OUTER FRAME LONG CROSS TUBE	1
2	MC-397789	OUTER FRAME MIDDLE TUBE	1
1	MC-397788	OUTER FRAME ANGLE TUBE	2

PARTS LIST

UNLESS OTHERWISE SPECIFIED			ORIGINATOR	I.FANG	23-APR-2002
.XX	.XXX	ANGLES	DRAWN	G.SMITH	23-APR-2002
± .06	± ---	± ---	CHECKED	J.KILMER	06-JUN-2002
1. BREAK ALL SHARP EDGES .015 MAX. 2. DO NOT SCALE DRAWING. 3. DIMENSIONS BASED UPON ANSI Y14.5M-1982 4. ALL DIMENSIONS ARE INCHES 5. MAX. ALL MACH. SURFACES			APPROVED	J.KILMER	06-JUN-2002
			USED ON	MD-397786	
			MATERIAL	SEE PARTS LIST ABOVE	

FERMI NATIONAL ACCELERATOR LABORATORY
UNITED STATES DEPARTMENT OF ENERGY

PPD/MECHANICAL DEPARTMENT
E907 CHAMBER #2 SUPPORT STAND
OUTER FRAME WELDMENT

SCALE	DRAWING NUMBER	SHEET	REV
1:8	3907.500-MD-397787	1 OF 1	

CREATED WITH : Ideas8m4 GROUP: PPD/MECHANICAL DEPARTMENT