REV	DESCRIPTION	DRAWN	DATE
		APPROVED	DATE

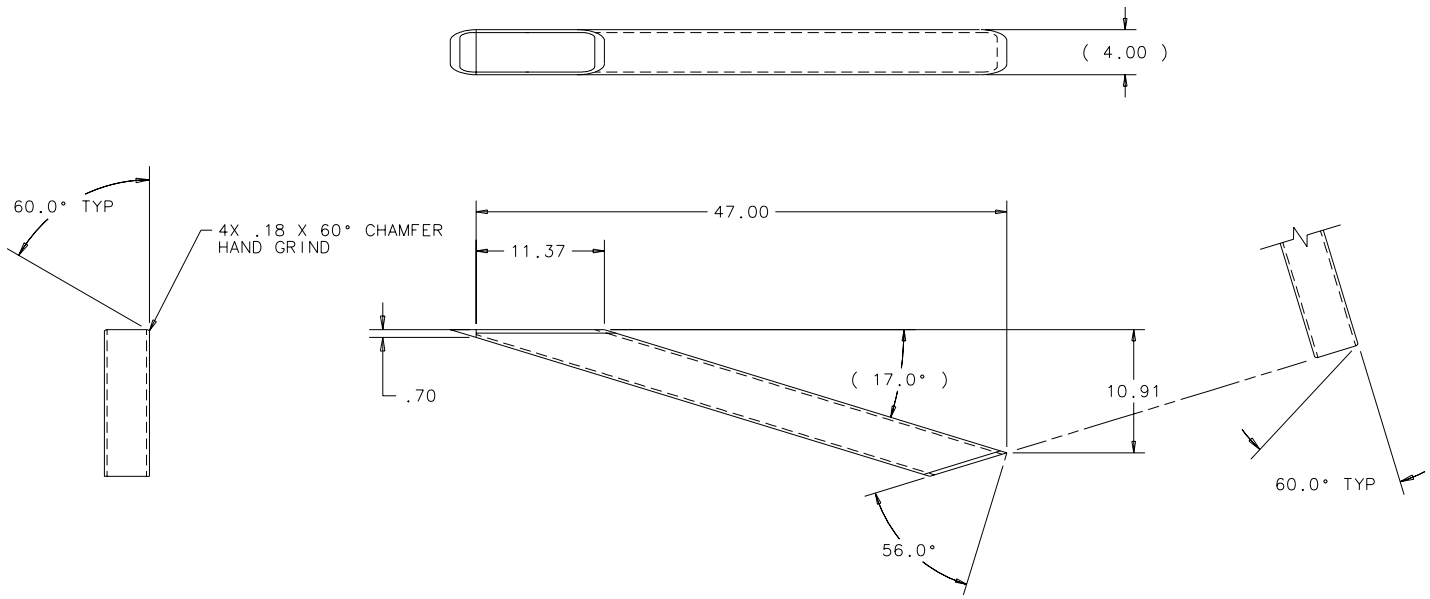

NOTE:
SAW CUT IS PERMISSIBLE

ITEM	PART NO.	DESCRIPTION OR SIZE	QTY.

PARTS LIST

UNLESS OTHERWISE SPECIFIED					
.XX	.XXX	ANGLES	ORIGINATOR	I.FANG	25-APR-2002
± .03	± ---	± 1°	DRAWN	G.SMITH	25-APR-2002
			CHECKED	J.KILMER	06-JUN-2002
			APPROVED	J.KILMER	06-JUN-2002

1. BREAK ALL SHARP EDGES .015 MAX.
2. DO NOT SCALE DRAWING.
3. DIMENSIONS BASED UPON ANSI Y14.5M-1982
4. ALL DIMENSIONS ARE INCHES
5. MAX. ALL MACH. SURFACES 250

USED ON
MD-397787

MATERIAL
ALUMINUM SQUARE TUBING-6063-T52
4 X 4 X .25 WALL

FERMI NATIONAL ACCELERATOR LABORATORY
UNITED STATES DEPARTMENT OF ENERGY

PPD/MECHANICAL DEPARTMENT
E907 CHAMFER #2 SUPPORT STAND
OUTERFRAME - SHORT CROSS TUBE

SCALE	DRAWING NUMBER	SHEET	REV
1:8	3907.500-MC-397791	1 OF 1	

CREATED WITH : Ideas8m4 | GROUP: PPD/MECHANICAL DEPARTMENT