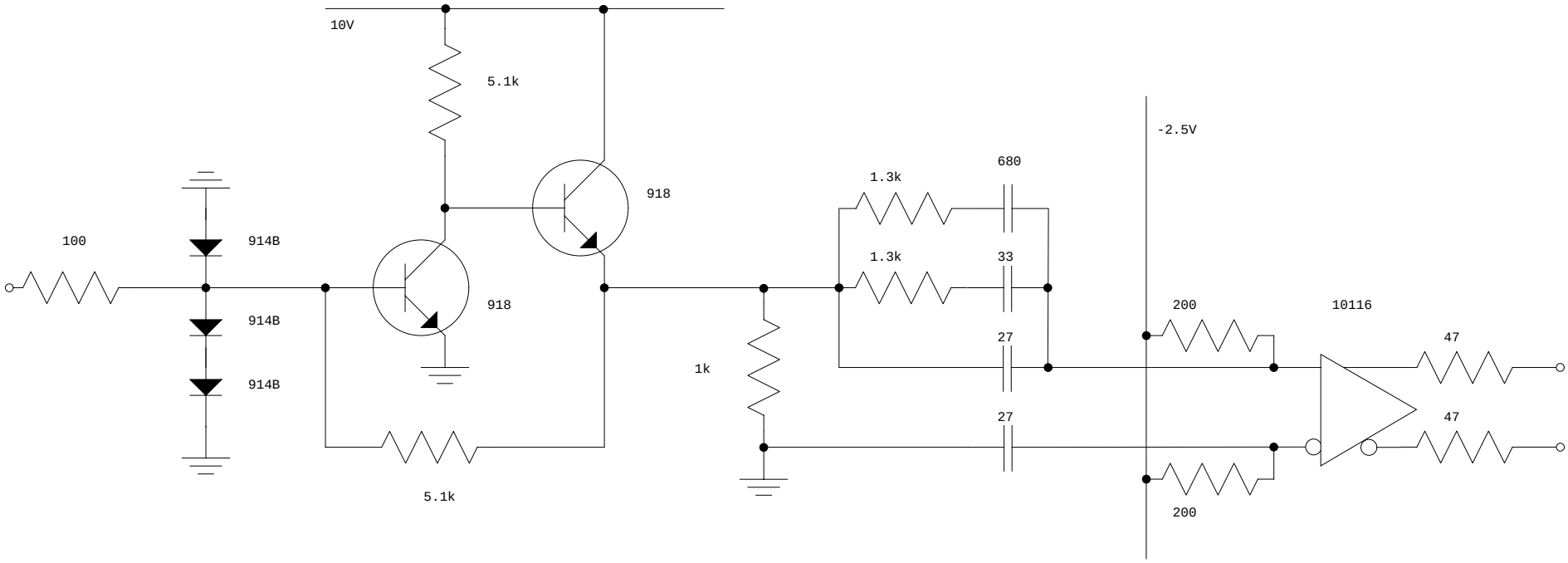

Nevis Pre-Amp D4091
1 of 8 channels