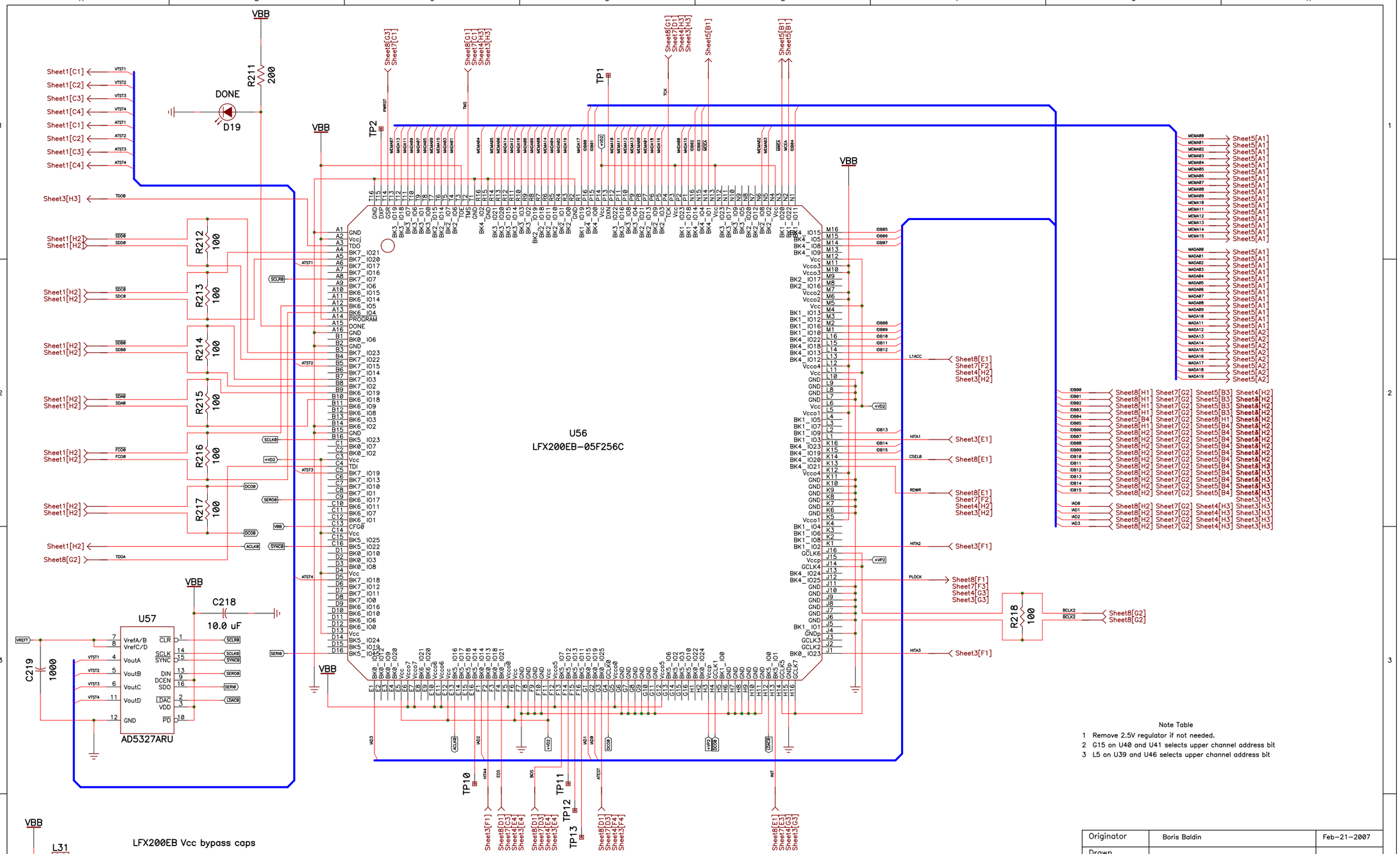

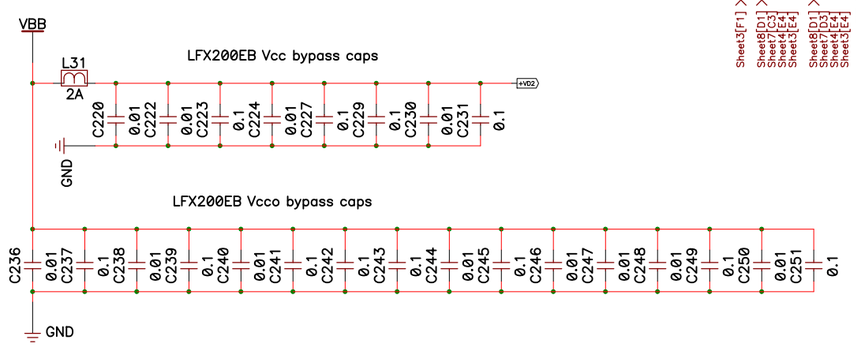

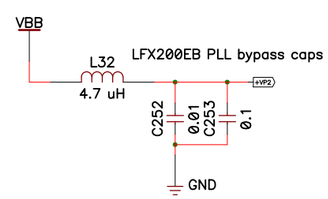

Note Table

1 Remove 2.5V regulator if not needed.
2 G15 on U40 and U41 selects upper channel address bit
3 L5 on U39 and U46 selects upper channel address bit

Originator	Boris Baldin	Feb-21-2007
Drawn	Boris Baldin	
Checked		
Approved		

FERMI NATIONAL ACCELERATOR LABORATORY
UNITED STATES DEPARTMENT OF ENERGY

Title

MIPP Plastic Ball Front-End Board

Wed Feb 08, 2012 11:19:43

Size	Drawing Number	Rev
C	00001	A

Filename PBFE_03.SCH Sheet 6 of 9