REV.	DESCRIPTION	DRAWN / APPROVED	DATE
A	ITEMS 7 & 8 WERE 8" DIA. CASTERS NOW 6" DIA. ITEMS 5 & 6 WERE 1/2" RAILS ITEMS 2 & 3 LENGTHENED ITEM 18 MODIFIED (SEE DETAILS) ITEMS 14;15;16;17 QTY. WAS 108 ITEM 9 WAS 5/8 BOLT;QTY.WAS 32 ITEM 10;11 WAS 48 ITEMS 19 & 20 ADDED ITEM 14 WAS 5/8 DIA. BOLT VIEW F DELETED	G SMITH	3/5/02
		C NILA	3/28/02
B	QTY OF ITEM 14 WAS 84;QTY OF ITEMS 15,16,17 WA 192	G SMITH	4/16/02
		C NILA	4/16/02

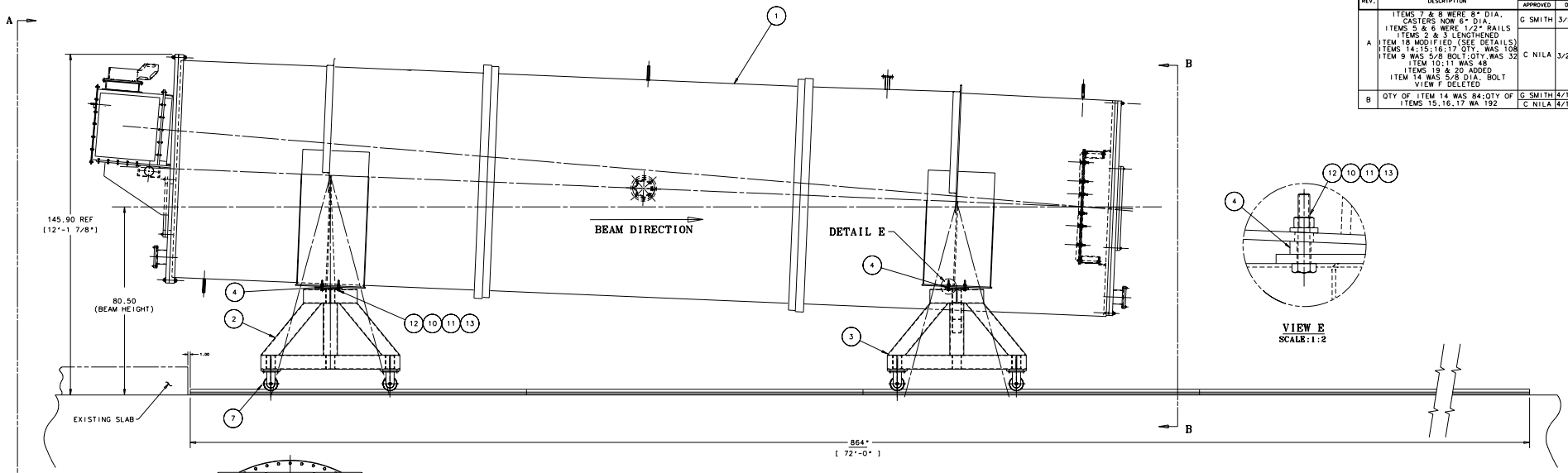

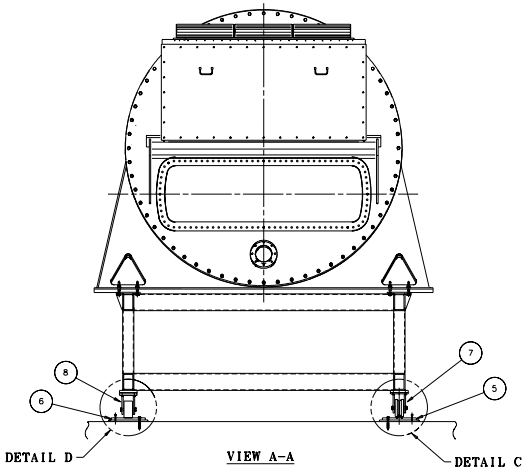

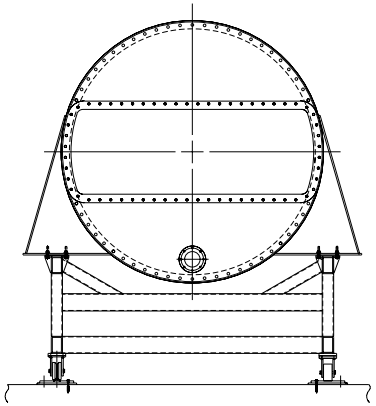

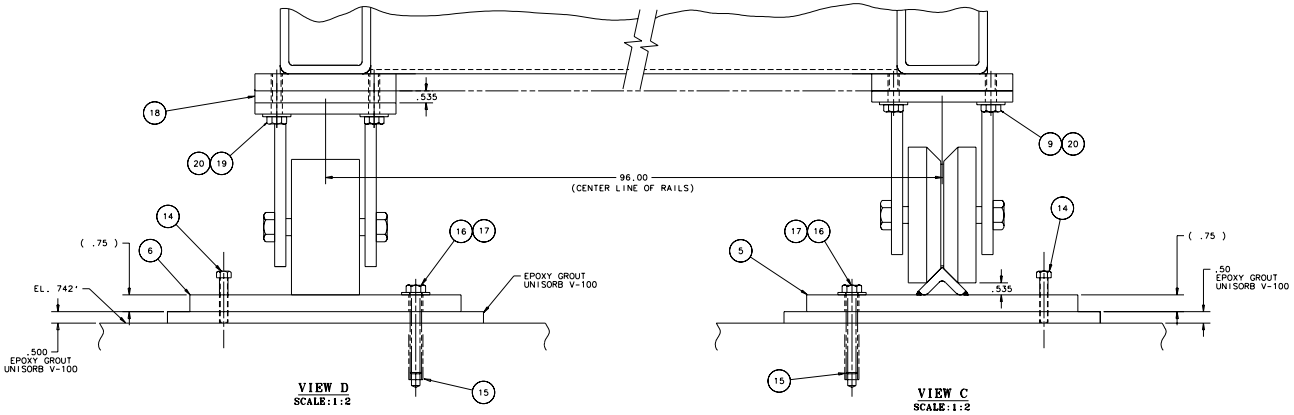

ITEM NO.	PART NO.	DESCRIPTION OR SIZE	QTY. REQ.
20	COML	1/2 FLAT WASHER-STEEL	32
19	COML	1/2-13 UNC-2A X 1 3/4" LG. HEX HEAD. CAP SCREW - STEEL	16
18	MC-397666	SHIM - FLAT	4
17	COML	FLAT WASHER 18-8 SST. 1/2 SCREW SIZE - McMASTER #92141A033	192
16	COML	1/2-13 UNC-2A X"LG. HEX.HEAD SCREW 18-8 SST. McMASTER #92198A720	192
15	COML	HDI FLUSH MOUNT INTERNAL THREAD ANCHOR HDI-1/2 HILTI #00045754	192
14	COML	3/8-16 UNC-2A X 1 1/2 " LG. HEX. HEAD SCREW-18-8 SST. McMASTER #92198A628	168
13	COML	5/8" BEVEL WASHER - STEEL	16
12	COML	5/8-11 UNC-2A X 3 3/4 LG. HEX. HEAD CAP SCREW - STEEL	16
11	COML	5/8" FLAT WASHER - STEEL	16
10	COML	5/8-11 UNC-2B HEX NUT	16
9	COML	1/2-13 UNC-2A X 1 1/4" LG. HEX HEAD. CAP SCREW - STEEL	16
8	COML	ALBION SHOCKMASTER KINGPINLESS STYLE CASTER-#600FS06501R	4
7	COML	ALBION SHOCKMASTER KINGPINLESS STYLE CASTER-#600VF06501R	4
6	3907.500 MD-397760	FLAT RAIL WELDMENT	1
5	MD-397619	GUIDE RAIL WELDMENT	1
4	MC-285968	SHIM - ANGLED	4
3	ME-397617	RICH DETECTOR STAND (DOWNSTREAM)	1
2	ME-397616	RICH DETECTOR STAND (UPSTREAM)	1
1	ME-285811	CERENKOV MAIN ASSEMBLY RICH DETECTOR	1

PARTS LIST

UNLESS OTHERWISE SPECIFIED			ORIGINATOR	J KILMER	8/01
.XX	.XXX	ANGLES	DRAWN	G SMITH	9/10/01
± —	± —	± —	CHECKED	C NILA	10/17/01
			APPROVED	JAMES R.KILMER	10/17/01

1. BREAK ALL SHARP EDGES .015 MAX.
2. DO NOT SCALE DRWG.
3. DIMENSIONING IS ACCORD WITH ANSI Y14.5M-1982
4. ALL DIMENSIONS ARE IN INCHES.

USED ON: 9200.001-ME-397568

MAX. ALL MACHINED SURFACES

MATERIAL: SEE PARTS LIST

FERMI NATIONAL ACCELERATOR LABORATORY
UNITED STATES DEPARTMENT OF ENERGY

PPD/MECHANICAL DEPARTMENT
E-907 RICH DETECTOR STAND
ASSEMBLY

SCALE	DRAWING NUMBER	SHEET NO.	REV.
3:32 & NOTED	9200.001-ME-397615	1 OF 1	B

Plotted by gsmith on 19-Apr-02 , File: 397615-01u.prf