REV.	DESCRIPTION	DRAWN / APPROVED	DATE / DATE
A	PLATE WAS 1/2 X 12 X 240 LG. 5/16 X 45° CHAMFER ADDED	G SMITH	3/12/02
		C NILA	3/28/02
B	USED ON WAS 9200.001-ME-397619	G SMITH	4/16/02
		C NILA	4/16/02

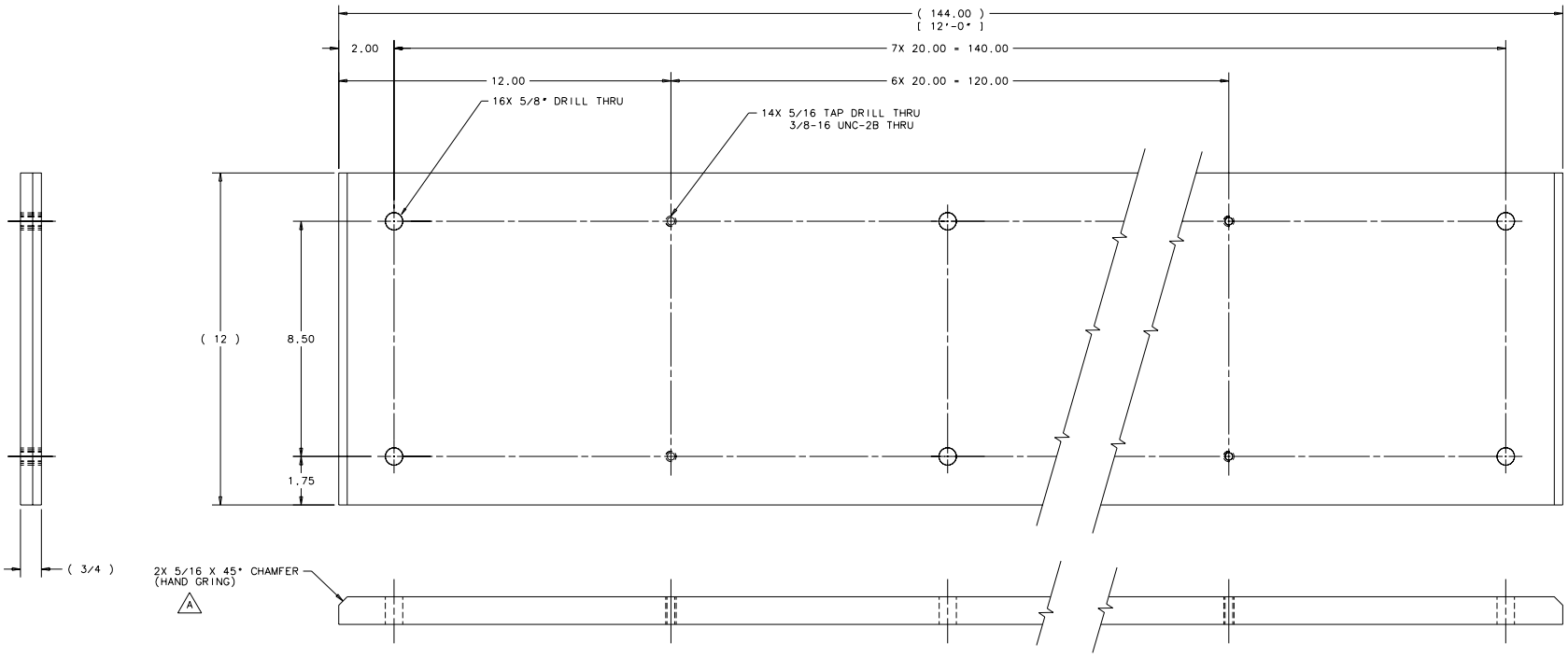

ITEM NO.	PART NO.	DESCRIPTION OR SIZE	QTY. REQ.
PARTS LIST			

UNLESS OTHERWISE SPECIFIED					
.XX	.XXX	ANGLES	ORIGINATOR	J KILMER	9/01
± .06	± .030	± —	DRAWN	G SMITH	9/18/01
			CHECKED	C NILA	10/17/01
			APPROVED	JAMES R.KILMER	10/17/01

1. BREAK ALL SHARP EDGES .015 MAX.
2. DO NOT SCALE DRWG.
3. DIMENSIONING IN ACCORD WITH ANSI Y14.5M-1982 STD'S.
4. ALL DIMENSIONS ARE IN INCHES.

125 √ MAX. ALL MACHINED SURFACES

USED ON B: 9200.001-MD-397619, 3907.500-MD-397760

MATERIAL A: FLATS,RECTANGULAR 3/4 X 12 1018 C.D.STEEL

FERMI NATIONAL ACCELERATOR LABORATORY
UNITED STATES DEPARTMENT OF ENERGY

RD/MECHANICAL SUPPORT DEPT.
E-907 RICH DETECTOR
CALORIMETER RAIL SYSTEM-RAIL PLATE

SCALE	DRAWING NUMBER	SHEET NO.	REV.
1:2 & NOTED	9200.001-MD-397620	1 OF 1	B

Plotted by gsmith on 19-Apr-02 , File: 397620-01a.pff