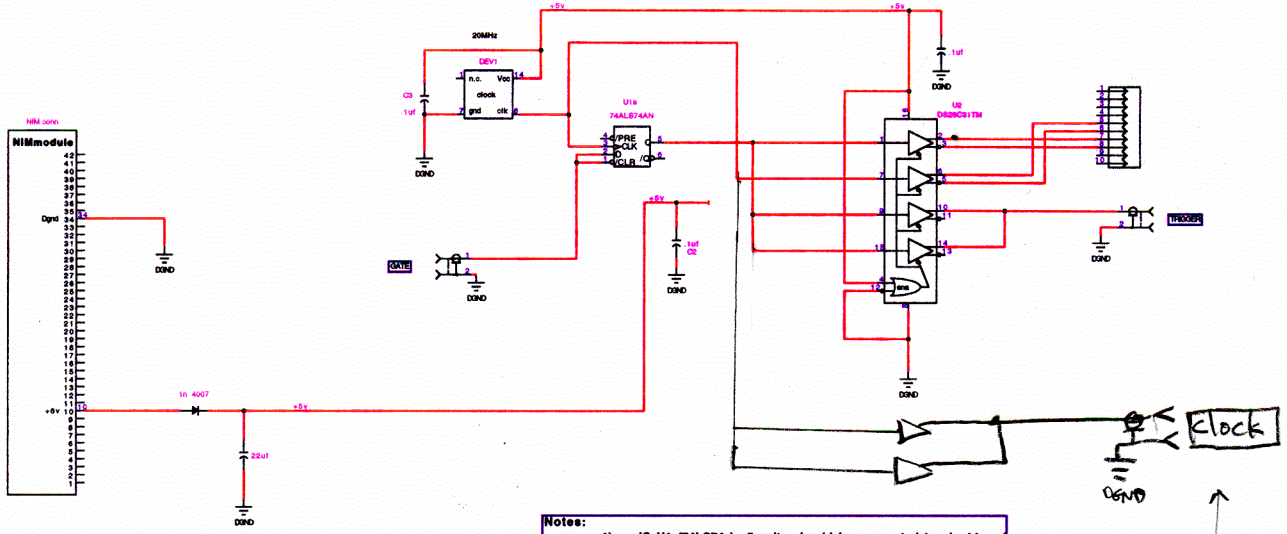

Notes:

1) on IC U1 (74LS74) +5 volts should be connected to pin 14 and ground should be connected to pin 7

2) C2 should be connected across pin 14 and pin 7 of U1

3.) Add GND plane

4.) Add lemo output for clock

DIV/GROUP		REV	ZONE	DESCRIPTION	DATE	DRAWN	APPROVED
D/SED/ ISG							
ORIGINATOR		TITLE					
ELDEN ABLES				TPC clock			
DRAWN	DATE						
ELDEN ABLES	7/23/01						
CHECKED	DATE						
APPROVED	DATE						

Lawrence Livermore National Laboratory
ELECTRONICS ENGINEERING DEPARTMENT
University of California/Livermore, California

GROUP	BASIC PACKAGE NO.	SUB	TYPE	REV
LEA				

SIZE D — SHEET 1 OF 1