THIS DRAWING IS UNPUBLISHED. RELEASED FOR PUBLICATION .19 .
© COPYRIGHT 19 BY AMP INCORPORATED. ALL RIGHTS RESERVED.

LOC	DIST
AD	00

REVISIONS

P	LTR	DESCRIPTION	DATE	DWN	APVD
	L	REDRAWN & ADDED -7 PER EC 0G52-71-98	10 SEP 98	–	–
	M	ADDED -8 PER EC 0G52-99-98	22 SEP 98	MB	HR
	N	REV PER 0G3C-0075-99	28OCT99	WWH	MM

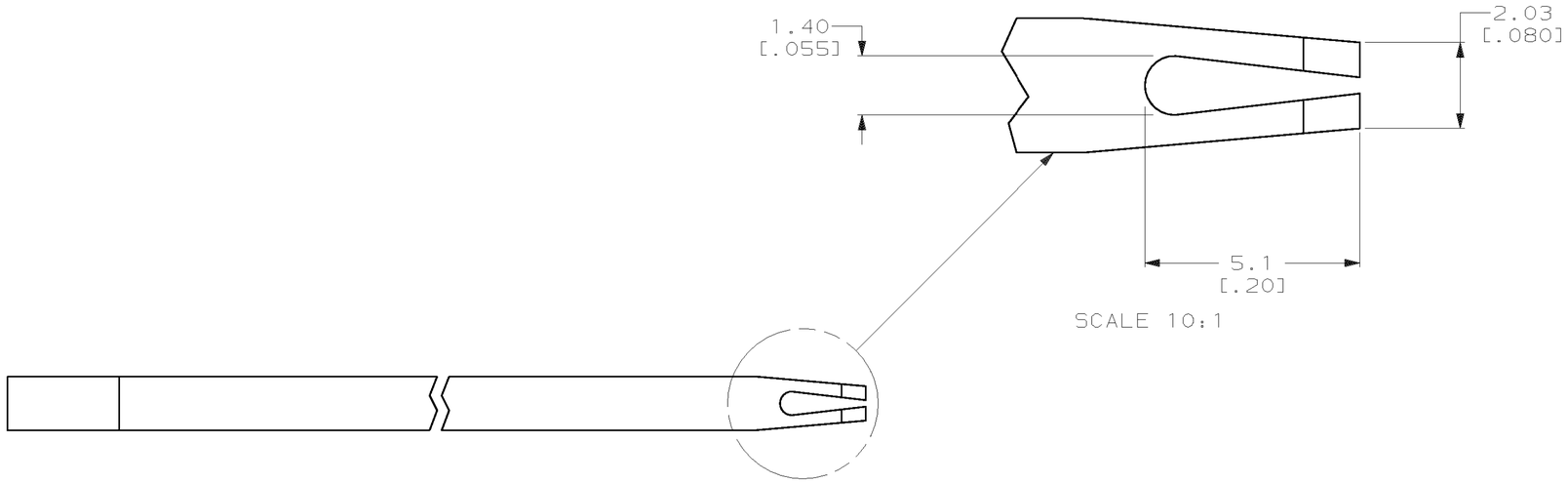

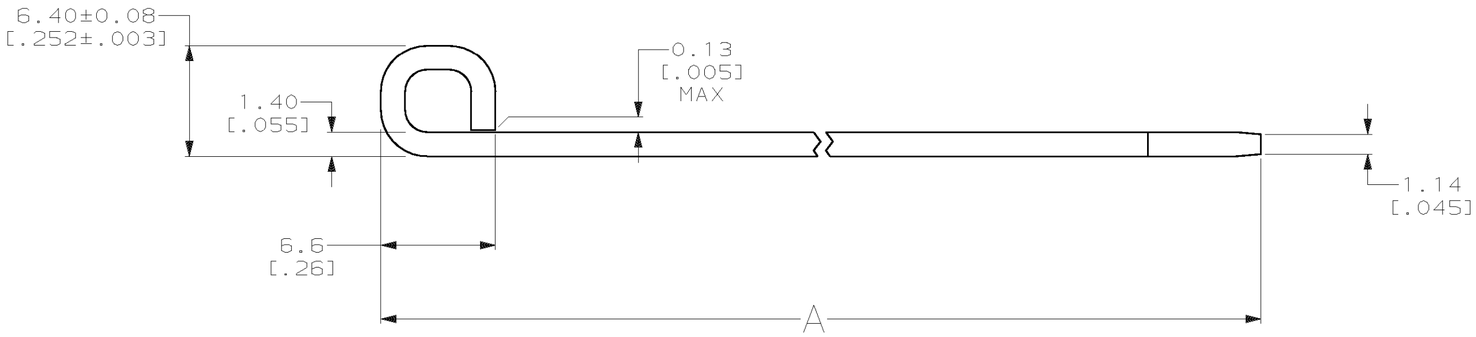

A	PART NUMBER
114.3 [4.50]	645293-8
175.3 [6.90]	645293-7
132.1 [5.20]	645293-6
333.2 [13.12]	645293-5
85.9 [3.38]	645293-3

THIS DRAWING IS A CONTROLLED DOCUMENT.

DIMENSIONS: mm [INCHES]

TOLERANCES UNLESS OTHERWISE SPECIFIED:

0 PLC	±-
1 PLC	±0.5 [.02]
2 PLC	±0.25 [.010]
3 PLC	±-
4 PLC	±-
ANGLES	±-

MATERIAL: STAINLESS STEEL

FINISH: -

DWN B.CARBO 10 SEP 98
CHK R.STONE 14 SEP 98
APVD H.ROSE 14 SEP 98
PRODUCT SPEC –
APPLICATION SPEC –
WEIGHT –

CUSTOMER DRAWING

AMP Incorporated
Harrisburg, PA 17105-3608

NAME: CAM ROD, ZIF MODEL II

SIZE	CAGE CODE	DRAWING NO	RESTRICTED TO
A2	00779	C- 645293	–

SCALE 4:1 SHEET 1 OF 1 REV N

645293

AMP 1471-9 REV 11JUN97

28-OCT-99 14:08:21 amp33743 /home/amp33743/edmmod