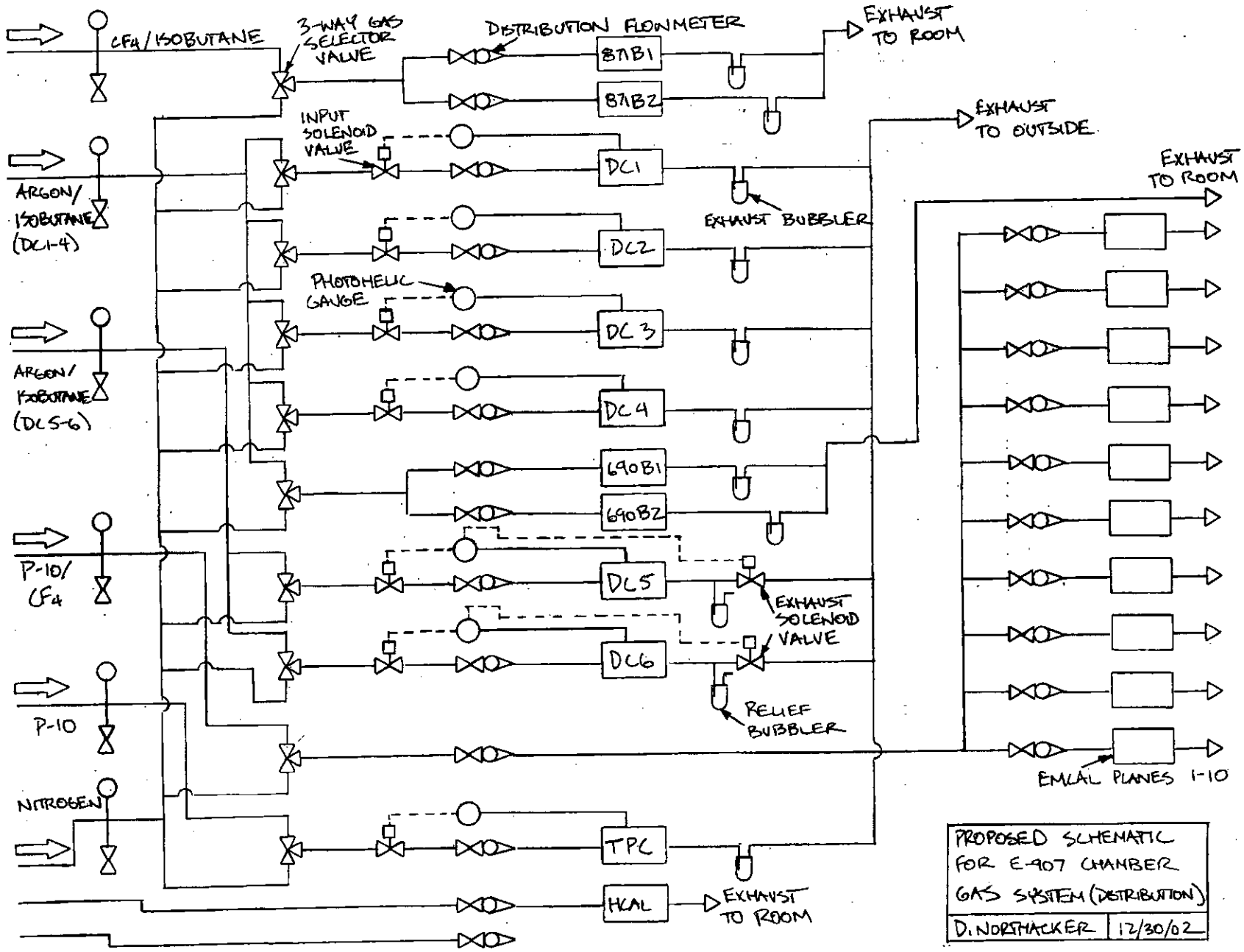
CF4/ISOBUTANE
3-WAY GAS SELECTOR VALVE
DISTRIBUTION FLOWMETER
EXHAUST TO ROOM
871B1
871B2
INPUT SOLENOID VALVE
EXHAUST TO OUTSIDE
EXHAUST TO ROOM
ARGON/ ISOBUTANE (DC1-4)
DC1
EXHAUST BUBBLER
DC2
PHOTOHELIC GAUGE
DC3
ARGON/ ISOBUTANE (DC5-6)
DC4
690B1
690B2
P-10/ CF4
DC5
EXHAUST SOLENOID VALVE
DC6
P-10
RELIEF BUBBLER
NITROGEN
EMCAL PLANES 1-10
TPC
HCAL
EXHAUST TO ROOM
PROPOSED SCHEMATIC FOR E-907 CHAMBER GAS SYSTEM (DISTRIBUTION)
D. NORTHACKER
12/30/02